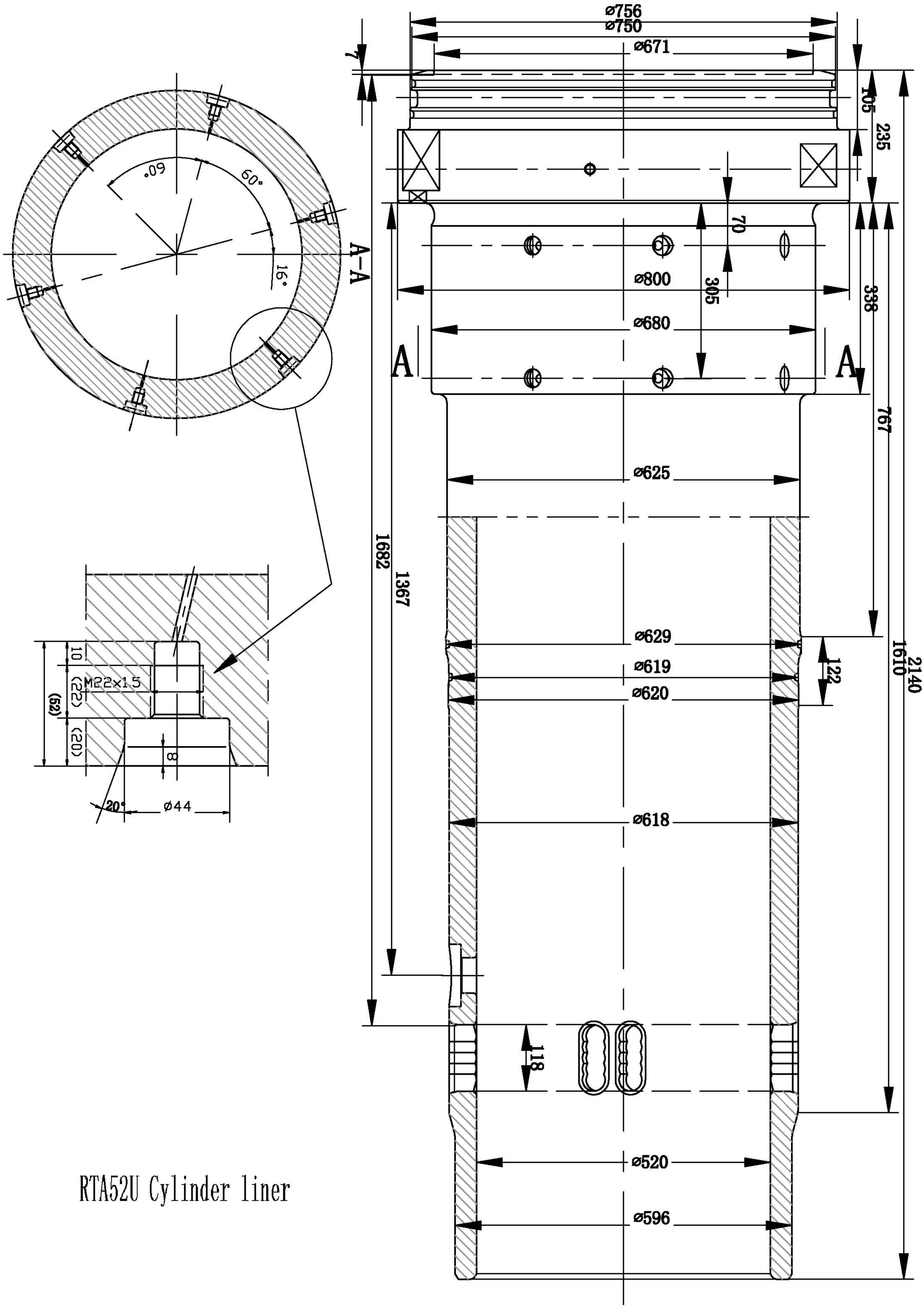

RTA52U Cylinder liner