Ingersoll Rand®

Vehicle Service Catalogue

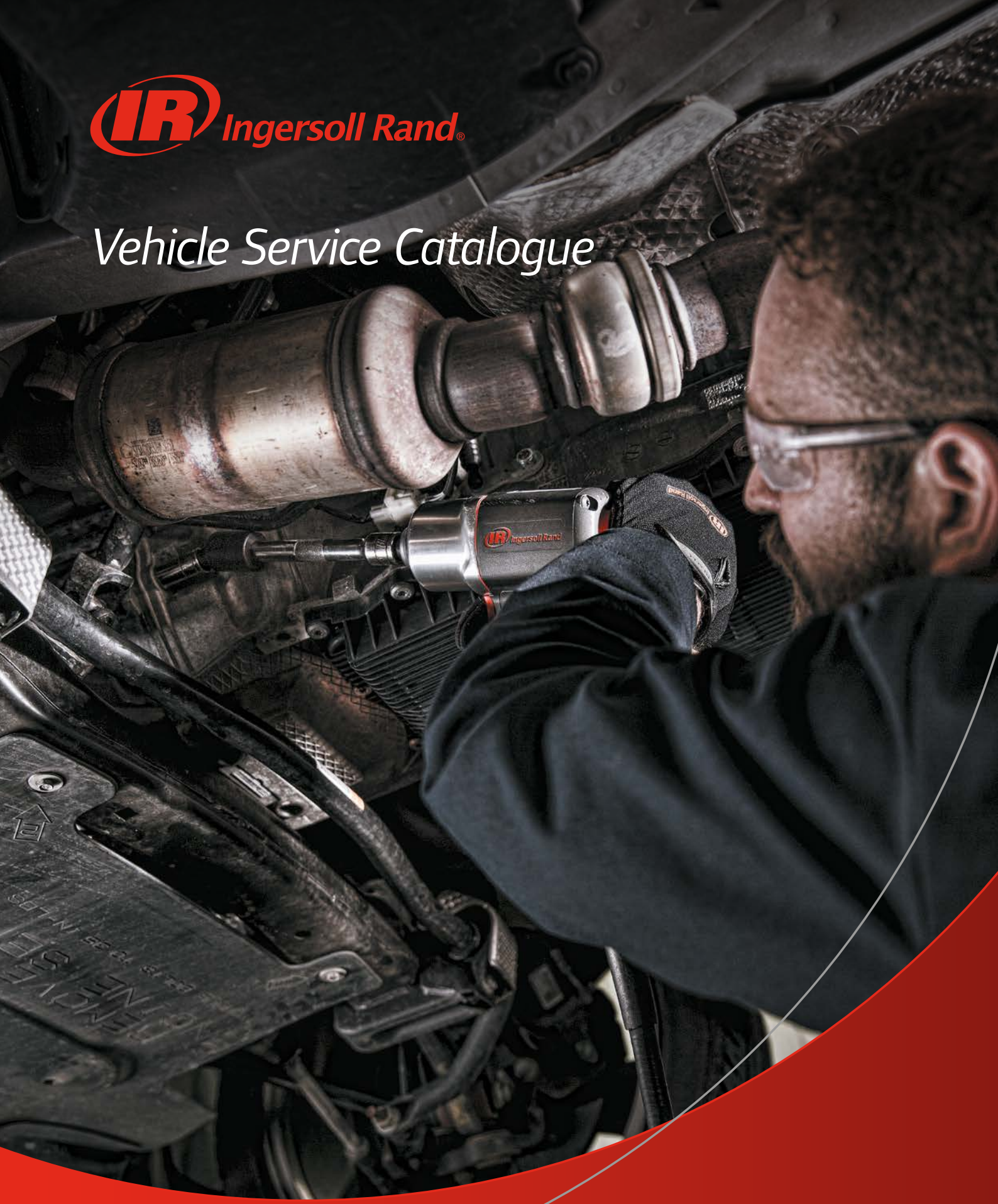

REAL TOOLS FOR REAL WORK.℠

Contents

4 Cordless IQV™ Tools and Accessories

Ingersoll Rand IQV Series cordless tools are specifically designed for the service and production industries — delivering best-in-class power and durability, and a strong commitment to our customers. The same engineering that made our air tools the world's best now delivers cordless technologies that get the most out of every volt.

12 Air Ratchets and Accessories

Compact. Convenient. Real time-savers. Air ratchets have become essential elements in every serious toolbox. Ingersoll Rand ratchets combine access and power to make jobs more productive and profitable, and feature unique qualities you won't find anywhere else.

14 Air Impactools™ and Accessories

Ingersoll Rand air Impactools are the tools professional mechanics use when nothing else will do the job. They'll break loose a frozen bolt when others can't make it budge. With fewer working parts, simplified maintenance, and less wasted energy, Ingersoll Rand air Impactools are the finest examples of delivering more power to professional mechanics.

29 Air Finishing Tools and Accessories

Ingersoll Rand has the most complete line of air finishing tools. Sanders, polishers, and buffers, from traditional styles for heavy material removal to the newest models for excellent control and brilliant surfaces. All Ingersoll Rand finishing tools are designed for long-life and swirl-free finishes.

34 Air Grinders, Cutting Tools and Accessories

With high-strength steels, advanced plastics, and new composite materials in today's cars and trucks, you need versatile tools for precise, controlled cutting. Ingersoll Rand cutting tools are the reliable choice of auto body and repair shops, used for everything from muffler and exhaust work to sunroof installations and body repairs.

38 Air Drills, Screwdrivers, and Accessories

Ingersoll Rand air drills have industrial-grade chucks and keyless chuck versions that are extra tough for drilling, sawing, valve guide reaming, cylinder honing, and wire brushing. They are powerful, efficient, and durable with smooth, quiet operation.

42 Air Hammers and Accessories

Our air hammers are designed so you can let the tool do the work, whether it's cutting, punching, chipping, or scraping. Each air hammer comes with a coil spring retainer for fast and easy chisel changes. You can also buy a five-piece chisel set, or get an Ingersoll Rand air hammer kit which includes both the hammer and the chisel set.

NEW

Our recommendation Cordless

1/2" Cordless Right Angle Impactool™

W5350 – Tool only 20 V
W5350-K12-EU – Kit 2.5 Ah (1 battery)
1/2" ■ Cordless Right Angle Impactool

- 245 Nm of maximum torque
- Variable speed switch with electronic brake provides maximum control of the tool
- No reaction

1/2" Cordless Impactool™

W7150EU
W7150EU-K2 – Kit 3.0 Ah
W7150EU-K22 – Kit 5.0 Ah
1/2" Cordless Impactool 20 V
(CCN: 48401855)

- 1,057 Nm (780 ft-lb) of maximum torque and 1,486 Nm (1,100 ft-lb) of nut-busting torque, that's the best-in-class performance
- Steel-reinforced housings add strength for unmatched drop resistance
- Variable speed switch with electronic brake provides maximum control of the tool

Cordless new batteries

The new IQV20 Series High Capacity x5.0 and r2.5 Batteries delivers unmatched performance with 68% longer run time and the same size and weight as its predecessor.

BL2012
Battery 20 V, 2.5 Ah, Li-Ion
(CCN: 47515903001)

BL2022
Battery 20 V, 5.0 Ah, Li-Ion
(CCN: 47515902001)

Cordless
Impactools

W7150EU – Tool only 20 V
W7150EU-K2 – Kit 3.0 Ah
W7150EU-K22 – Kit 5.0 Ah
1/2" ■ Cordless Impactool

Accessories: **W7150-BOOT**
(CCN: 48401855)
Protective tool boot

- 1,057 Nm (780 ft-lb) of maximum torque and 1,486 Nm
- (1,100 ft-lb) of nut-busting torque, that's the best-in-class performance
- Steel-reinforced housings add strength for unmatched drop resistance
- Variable speed switch with electronic brake provides maximum control of the tool

W1130 – Tool only 12 V
W1130EU-K2 – Kit
3/8" ■ Cordless Impactool
W1120 – Tool only 12 V
W1120EU-K2 – Kit
1/4" ■ Cordless Impactool

- 135 Nm (100 ft-lb) of maximum torque
- Steel-reinforced housings add strength for unmatched drop resistance
- Variable speed switch with electronic brake provides maximum control of the tool

W5150 – Tool only 20 V
W5150-K22-EU – Kit
1/2" ■ Cordless Impactool
W5130 – Tool only 20 V
W5130-K22-EU – Kit
3/8" ■ Cordless Impactool

Accessories: **W5130-BOOT**
(CCN: 48624753)
Protective tool boot

- Till 260 Nm (190 ft-lb) of maximum torque in reverse
- Steel-reinforced housings add strength for unmatched drop resistance
- Variable speed switch with electronic brake provides maximum control of the tool

	CCN Tool only	Battery	V	Nm max	rpm	bpm	kg	Length mm	dB(A)	m/s²/K(1)
1/2" ■ Cordless Impactools										
W7150EU	48391692	BL2022	20	1,057	0 – 1,900	2,300	3.10	238	89.0	12.2/1.8
	48391692	BL2010	20	-	-	-	-	-	-	-
W5150	48620801	BL2012	20	245	0 – 1,700	2,900	1.60	168	91.0	8.8/2.6
3/8" ■ Cordless Impactools										
W5130	48377840	BL2012	20	245	0 – 1,700	2,900	1.60	168	91.0	8.8/2.6
W1130	47500084001	BL1203	12	135	0 – 2,700	3,300	1.04	150	82.0	3.8/2.7
1/4" ■ Cordless Impactools										
W1120	47500081001	BL1203	12	135	0 – 2,700	3,300	1.04	150	82.0	3.8/2.7

(1) ISO28927 – 3-axis measurement: vibration level/measurement uncertainty.

Available in kits

	CCN	Description
W5130-K22-EU	47530973001	3/8" Drive Impactool, Charger 12/20 V, 2 BL2012 (2.5 Ah) Li-Ion Batteries & Case
W5150-K22-EU	47530977001	1/2" Drive Impactool, Charger 12/20 V, 2 BL2012 (2.5 Ah) Li-Ion Batteries & Case
W7150EU-K2	48391734IRI	1/2" Drive Impactool, Charger 12/20 V, 2 BL2010 (3.0 Ah) Li-Ion Batteries & Case
W7150EU-K22	47524963001	1/2" Drive Impactool, Charger 12/20 V,2 BL2022 (5.0 Ah) Li-Ion Batteries & Case
W1130EU-K2	47500089001	3/8" square 12 V Impactool, Charger, 2 Li-Ion Batteries & Tool Bag
W1120EU-K2	47500088001	1/4" Drive Impactool, Charger, 2 BL2005 Li-Ion Batteries & Case

Cordless
Impact drivers

W5111 – Tool only 20 V
W5111-K22-EU – Kit
1/4" ● Cordless Impact driver

Accessories: **W5111-BOOT**
(CCN: 47499747001)
Protective tool boot

- Till 260 Nm (190 ft-lb) of maximum torque in reverse
- Steel-reinforced housings add strength for unmatched drop resistance
- Variable speed switch with electronic brake provides maximum control of the tool

W1110 – Tool only 12 V
W1110EU-K2 – Kit
1/4" ● Cordless Impact driver

- 135 Nm (100 ft-lb) of maximum torque
- Steel-reinforced housings add strength for unmatched drop resistance
- Variable speed switch with electronic brake provides maximum control of the tool

	CCN Tool only	Battery	V	Max Nm	rpm	bpm	kg	Length mm	dB(A)	m/s²/K(1)
1/4" ● Cordless Impact Drivers										
W5111	48620793	BL2012	20	240	0 – 1,900	2,800	1.60	154	86.0	4.7/1.2
W1110	47500078001	BL1203	12	135	0 – 2,700	3,300	1.05	150	82.0	4.5/3.0

(1) ISO28927 – 3-axis measurement: vibration level/measurement uncertainty.

Available in kits

	CCN	Description
W5111-K22-EU	47530971001	1/4" Hex Drive Impactool, Charger 12/20 V, 2 BL2012 (2.5 Ah) Li-Ion Batteries & Case
W1110EU-K2	47500087001	1/4" hex quick change 12 V Impactool, Charger, 2 Li-Ion Batteries & Tool Bag

Cordless
Right Angle Impactools

W5350 – Tool only 20 V
W5350-K12-EU – Kit 2.5 Ah (1 battery)
1/2" ■ Cordless Right Angle Impactool

W5330 – Tool only 20 V
W5330-K12-EU – Kit
3/8" ■ Cordless Right Angle Impactool

Accessories: **W5330-BOOT**
(CCN: 47517635001)
Protective tool boot

An impact unlike any other wrench that goes where others simply can't, packing the nut-busting power and control you need to get the job done – sparing your knuckles while showing hard-to-reach jobs no mercy.

- 245 Nm of maximum torque
- Variable speed switch with electronic brake provides maximum control of the tool
- No reaction

Model	CCN	Battery	Voltage DC	Drive Size, Type	No-Load Speed rpm	Max. Torque ft-lb (Nm)	Tool & Battery Weight lb (kg)	Tool & Battery Length in (mm)
IQ^{V20} *Series*™ Right Angle Impactool								
W5330	47514540001	BL2012	20	3/8" Square	0–1,900	180 (245)	4.55 (2.06)	17.25 (439)
W5330	47514540001	BL2010/BL2022	20	3/8" Square	0–1,900	190 (258)	5.15 (2.27)	17.25 (439)
W5350	47514541001	BL2012	20	1/2" Square	0–1,900	180 (245)	4.55 (2.06)	17.25 (439)
W5350	47514541001	BL2010/BL2022	20	1/2" Square	0–1,900	190 (258)	5.15 (2.27)	17.25 (439)

Available in kits

	CCN	Description
W5330-K12-EU	47530980001	3/8" Drive Impactool, Charger 12/20 V, 1 BL2012 (2.5 Ah) Li-Ion Battery & Case
W5350-K12-EU	47530981001	1/2" Drive Impactool, Charger 12/20 V, 1 BL2012 (2.5 Ah) Li-Ion Battery & Case

Cordless
Ratchet

R3150 – Tool only 20 V
R3150-K12-EU – Kit* 1 battery
1/2" ■ Cordless Ratchet

R3150
1/4" Square Drive

R3130 – Tool only 20 V
R3130-K12-EU – Kit* 1 battery
3/8" ■ Cordless Ratchet

R3130
3/8" Square Drive

- 73 Nm (54 in-lb) of maximum torque
- 0 – 225 rpm free speed
- Variable-speed trigger allows easy starts and precise speed control.

R1130 – Tool only 12 V
R1130EU-K1 – Kit* 1 battery
3/8" ■ Cordless Ratchet

R1120 – Tool only 12 V
R1120EU-K1 – Kit* 1 battery
1/4" ■ Cordless Ratchet

R1120
1/4" Square Drive

R1130
3/8" Square Drive

40 Nm
TORQUE

	CCN	Battery	V	Nm max	rpm	kg	Length mm	dB(A)	m/s²/K(1)
1/2" ■ Cordless Ratchet									
R3150	48621056	BL2012	20	73	225	2.00	408	86.0	2.8/0.7
3/8" ■ Cordless Ratchet									
R3130	48621023	BL2012	20	73	225	2.00	408	86.0	2.8/0.7
R1130	47500062001	BL1203	12	40	260	0.98	280	76.0	< 2.5
1/4" ■ Cordless Ratchet									
R1120	47500060001	BL1202	20	73	225	2.00	408	86.0	2.8/0.7

(1) ISO28927 – 3-axis measurement: vibration level/measurement uncertainty.

Available in kits

	CCN	Description
R3130-K12-EU	47530966001	3/8" Drive Ratchet, Charger 12/20 V, 1 BL2012 (2.5 Ah) Li-Ion Battery & Case
R3150-K12-EU	47530968001	1/2" Drive Ratchet, Charger 12/20 V, 1 BL2012 (2.5 Ah) Li-Ion Battery & Case
R1130EU-K1	47500065001	3/8" Ratchet, Charger, Li-Ion Battery & Tool bag
R1120EU-K1	47500060001	1/4" Ratchet, Charger, Li-Ion Battery & Tool bag

Cordless
Drills

D5140 – Tool only 20 V
D5140-K2-EU – Kit 3.0 Ah
D5140-K22-EU – Kit 5.0 Ah
13 mm (1/2 in) Cordless Drill/Driver

- 80 Nm of maximum torque
- Keyless chuck
- Variable speed switch with electronic brake provides maximum control of the tool
- Steel-reinforced housings add strength for unmatched drop resistance

D1130 – Tool only 12 V
D1130EU-K2 – Kit
6.5 mm (1/4 in) Corldess Drill/Driver

D1430 – Tool only 12 V
D1430EU-K2 – Kit
1/4" ⬢ Cordless Screwdriver

- 23 Nm (205 ft-lb) of maximum torque
- Steel-reinforced housings add strength for unmatched drop resistance
- Variable speed switch with electronic brake provides maximum control of the tool

D1430
Quick Change Hex

D1130
3/8" Chuck

23 Nm
TORQUE

	CCN	Battery	V	Nm	rpm	kg	Length mm	dB(A)	$m/s^2/K^{(1)}$
13 mm (1/2) Drill/Driver Keyless chuck									
D5140	48489546	BL2022	20	80	500/1,900	2.45	245	75.0	< 2.5
	48489546	BL2010	20	–	–	–	–	–	–
D1130	47500112001	BL1203	12	23	400/1,600	1.10	190	64.0	< 2.5
1/4 ⬢ Cordless Screwdriver									
D1430	47500114001	BL1203	12	23	400/1,600	0.95	130	64.0	< 2.5

(1) ISO28927 – 3-axis measurement: vibration level/measurement uncertainty.

Available in kits

	CCN	Description
D5140-K2-EU	48498497	1/2" Drill/Driver, Charger 12/20 V, 2 BL2010 (3.0 Ah) Li-Ion Batteries & Case
D5140-K22-EU	47530987001	1/2" Drill/Driver, Charger 12/20 V, 2 BL2022 (5.0 Ah) Li-Ion Batteries & Case
D1130EU-K2	47500116001	3/8" 12 V Drill/Driver, Charger, 2 Li-Ion Batteries & Tool Bag

Cordless

Grease gun

LUB5130 – Tool only
LUB5130-K12-EU – Kit 2.5 Ah

- Pressure 431 bar (6,250 psi)
- Flowrate 75 g/min
- Grease capacity 400 g
- 3 ways loading: bulk, cartridge and manual
- Flexible hose 762 mm

Model	CCN	Description
LUB5130-K12-EU	47503151001	20V Grease Gun, Charger 12/20V, 1 BL2012 (2.5 Ah) Li-Ion Battery & Case

	CCN	Battery	V	psi (bar)	oz./min. (g/min.)	oz. (g)	NLGI	inches (mm)	† Pressure (L_P)	‡ Power (L_W)	Level	lb (kg)	inches (mm)
LUB5130	47503006	BL2012 and BL2010/ BL2022	20	6250 (431)	2.6 (75)	14 (400)	2 – 6	30 (762)	66	77	0.2	8.1 (3.7)	19 x 8 x 4 (490 x 200 x 94)

† KPA 3dB measurement uncertainty ‡ KWA 3dB measurement uncertainty

Task Light

L5110 – Tool only
20 V Cordless Task Light

- Ultra-bright white LED casts 180 lumens
- Compatible with all IQV20 batteries
- Multi-position head, standing base and hang hook allow for lighting from above or below at any angle

	CCN	Luminous Power	Run Time (hr)		Length	kg (lb)	
		Lumens	BL2012	BL2010/BL2022	mm (in)	BL2012	BL2010
IQ^{V20} *Series*™ LED Task Light							
L5110	48489561	180	12.5	15/22	121 (4.76)	0.86 (1.9)	1.10 (2.4)

Task Light

L1110 – Tool only
12 V Cordless Task Light

- Compatible with IQV12 battery BL1203
- Multi-position head, standing base
- Ultra-bright white LED casts 180 lumens

Model no. (bare unit)	CCN	Battery	Voltage DC	Light output	Runtime
			V	lumens	hours
IQV12 Series™ LED Task Light					
L1110	47500109001	BL1203	12	6 – 28	6.5

Cordless
Batteries and Charger

The IQV20 Series 20 V Lithium-Ion battery platform powers all of the cordless tools you need. That means all of the IQV20 Series tools you own can share batteries and chargers, making it easier and faster to have a freshly charged battery ready to get the job done.
Runtime – The x5.0 high capacity battery delivers 66% longer run time and longer shelf life than the 3.0 Ah battery without size or weight increase and fully compatible with all the IQV20 series.

Accessories:
BL2010-BOOT
(CCN: 47510964001)
protective battery boot for BL2010 and BL2022
BL2005-BOOT
(CCN: 47510965001)
protective battery boot for BL2005 and BL2012

BL2012 (CCN: 47515903001)
Battery 20 V, r2.5 Ah, Li-Ion

BL2010 (CCN: 48386791)
Battery 20 V, 3.0 Ah, Li-Ion

BL2022 (CCN: 47515902001)
Battery 20 V, x5.0 Ah, Li-Ion

BL1203 (CCN: 24206179)
Battery 12 V, 2.0 Ah Li-Ion
Performance – Each battery provides 2.0 Ah of 12 V power, intelligently managed by the IQV12 Series system for maximum tool runtime.
Durability – Positive-lock system emits highly audible click when properly secured in tool, helping to eliminate drops and damage.
Ergonomics – Patent-pending dual side button design for easier battery installation.

BC1121-EU (CCN: 47507874001)
Charger 12/20 V Batteries

Versatility – One charger for all your Ingersoll Rand batteries, fully compatible with all existing 20 V and 12 V batteries and that can charge USB mobile devices

Durability – Engineered composite housing withstands wear, abrasions, drops, and can be securely screw mounted to a wall or toolbox

---

BC1110-EU (CCN: 47499973001)
Charger 12 V Batteries

Performance – Brings fully depleted battery to 100% charge in about an hour.

Durability – Engineered composite housing withstands wear, abrasions, drops, and can be securely screw mounted to a wall or toolbox

NEW

Our recommendation Air

1/2" Impactool

2235QXPA – ring-type

Accessories: **2235QXPA-BOOT**
(CCN: 47536461001)
Protective tool boot

- 1,220 Nm of maximum torque in reverse and 1,760 Nm of nut busting torque

Vacuum-Ready-Sander

8202MAX

MAX Comfort:
low vibration and lightweight ergonomic desing reduced operator fatigue.

MAX Power:
powerful 0.20 kW motor and variable-speed regulator deliver the performance required for ALL of your finishing jobs.

MAX Productivity:
reduced vibration and improved stability increase abrasive pad life and help create a smoother finish.

Air
Ratchets wrench

1099XPA – 1/2"
109XPA – 3/8"

Accessories: **109-BOOT**
(CCN: 45505336)
Protective tool boot

- 103 Nm (76 ft-lb)
- 220 rpm
- Variable speed lever
- 360° adjustable exhaust

1207MAX-D4 – 1/2"
1207MAX-D3 – 3/8"

- 88 Nm (65 ft-lb) and 200 rpm
- Composite housing
- Power regulator
- Variable speed lever
- 360° adjustable exhaust

1077XPA – 1/2"
107XPA – 3/8"

Accessories: **107-BOOT**
(CCN: 45505328)
Protective tool boot

- 73 Nm (54 ft-lb)
- 160 rpm
- Variable speed lever
- 360° adjustable exhaust

1770 – 1/2"
170 – 3/8"

Deliver high performance with an exceptional value for money.

- 81 Nm (60 ft-lb) of maximum torque
- Heat-treated head provides exceptional durability
- Variable speed lever allows precise delivery of power

1105MAX-D3 – 3/8"
1105MAX-D2 – 1/4"

Accessories: **103-BOOT**
(CCN: 45505310)
Protective tool boot

- 41 Nm (30 ft-lb) and 300 rpm
- Only 0.65 kg and 187 mm
- Composite housing
- Power regulator
- Variable speed lever

105-D3 – 3/8"
105-D2 – 1/4"

Accessories: **103-BOOT**
(CNN: 45505310)
Protective tool boot

- 34 Nm (25 ft-lb)
- 250 rpm
- Only 0.64 kg and 186 mm
- Variable speed lever

Specifications at 6.2 bar (90 psi)

	CCN	Nm	Nm max	rpm	kg	Lenght mm	NPTF	Min. hose diameter mm	L/s	L/s max	dB(A)	m/s²/K(1)
1/2"												
1099XPA	80181001	14 – 87	103	220	1.51	306	1/4"	10	1.9	11.3	92.4	2.5/0.7
1207MAX-D4	45654225	14 – 81	88	200	1.45	275	1/4"	10	1.9	10.8	85.0	3.2/1.1
1077XPA	80171853	14 – 61	73	160	1.25	276	1/4"	10	1.9	8.8	94.4	< 2.5
1770	80103799	14 – 81	81	160	1.17	262	1/4"	10	1.9	10.0	94.8	2.8/0.7
3/8"												
109XPA	16578700	14 – 87	103	220	1.50	306	1/4"	10	1.9	11.3	92.4	2.5/0.7
1207MAX-D3	45643276	14 – 81	88	200	1.45	275	1/4"	10	1.9	10.8	85.0	3.2/1.1
107XPA	80171705	14 – 61	73	160	1.24	276	1/4"	10	1.9	8.8	94.4	< 2.5
170	80103781	14 – 81	81	160	1.16	262	1/4"	10	1.9	10.0	94.8	2.8/0.7
1105MAX-D3	45649480	7 – 34	41	300	0.65	187	1/4"	10	1.6	9.4	88.9	5.7/1.0
105-D3	45649738	7 – 27	34	220	0.64	186	1/4"	10	1.4	8.5	81.8	5.1/0.9
1/4"												
1105MAX-D2	45649035	7 – 34	41	300	0.65	187	1/4"	10	1.6	9.4	88.9	5.7/1.0
105-D2	45649571	7 – 27	34	220	0.64	186	1/4"	10	1.4	8.5	81.8	5.1/0.9

(1) ISO28927 – 3-axis measurement: vibration level/measurement uncertainty.

Air
1/4" and 3/8" Impactools™

2115QTiMAX – 3/8" ■ ring type

Accessories: **2115-BOOT**
(CCN: 45505351), protective tool boot

- 407 Nm (300 ft-lb)
- Only 1.13 kg and 151 mm
- Twin-hammer impact mechanism
- Titanium hammer case and composite housing
- 4-position power regulator
- 1-hand forward and reverse switch

2115XP – 3/8" ■

Perfect for any maintenance or repair application, the 2115XP delivers plenty of power and superior control, along with unmatched reliability that comes from more than a century of proven engineering and innovation.

Accessories: **2115-BOOT**
(CCN: 45505351), protective tool boot

- 370 Nm (407 ft-lb) of maximum torque in reverse
- Only 1.13 kg and 151 mm
- Twin-hammer impact mechanism
- 4-position power regulator and 1-hand forward and reverse switch

212 – 3/8" ■

The classic 212 is one of the most popular Impactools™ in its class. It provides plenty of power and rugged durability in a convenient easy-to-use package.

- 244 Nm (180 ft-lb) of maximum torque
- Pressure-feed lubrication system automatically greases the impact mechanism for increased durability and reliability
- Wide range of power regulator settings helps adjusting the power to the application

LA158 – 3/8" ■

Offers professional technicians performance, comfort and durability with great value for money.

- 136 Nm (100 ft-lb) of maximum torque
- Small size to allow greater access to tight spaces
- Easy glide forward/reverse switch
- Wide range of power regulator settings helps adjusting the power to the application

2015MAX – 3/8" ■

- 244 Nm (180 ft-lb)
- Only 1.54 kg
- Jumbo-hammer impact mechanism
- Composite housing
- 2-position power regulator

2102XP – 3/8" ■
2101XP – 1/4" ■

- 68 Nm (50 ft-lb)
- Only 0.6 kg and 165 mm
- Swinging-hammer impact mechanism
- Composite housing
- 1-hand forward and reverse switch

216B – 3/8" ■

- 271 Nm (200 ft-lb)
- Only 1.27 kg
- Ball & cam impact mechanism
- Power regulator

211 – 3/8" ■

- 204 Nm (150 ft-lb)
- Only 1.09 kg
- Jumbo-hammer impact mechanism
- 5-position power regulator

Service Kits

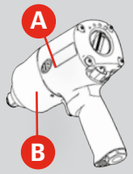

	A	B
1105MAX-D2	45668456	45668522
105-D2	45668142	45668522
2115QTiMAX	45585189	45585932
2115XP	45585189	45585932
2015MAX	47100474	47100359
212	03866522	—
211	03866449	—
LA158	49827108	49827090
109XPA	16594160	16594384
107XPA	80146491	16590416
1207MAX-D3	47085931	47086368
1105MAX-D3	45668456	45668563
105-D3	45668142	45668563

Specifications at 6.2 bar (90 psi)

	CCN	Nm	Nm max	rpm	BPM	kg	Lenght mm	NPTF	Min. hose diameter mm	L/s	L/s max	dB(A)	$m/s^2/K^{(1)}$
3/8" ■													
2115QTiMAX	45587326	34 – 312	407	15,000	1,500	1.13	151	1/4"	10	1.9	8.0	93.2	7.5/1.8
2115XP	45632130	34 – 285	370	15,000	1,500	1.13	151	1/4"	10	1.9	8.0	94.0	7.5/1.8
216B	46806600	20 – 217	271	8,500	1,600	1.27	196	1/4"	10	1.4	9.0	90.0	5.2/1.0
2015MAX	45533775	61 – 190	244	7,100	2,100	1.54	332	1/4"	10	1.6	9.0	96.6	17.4/3.0
212	01343151	27 – 170	244	10,000	1,500	1.31	152	1/4"	10	1.2	5.2	97.5	6.5/1.0
211	01343235	27 – 170	204	10,000	1,500	1.09	168	1/4"	10	1.2	5.2	104.0	5.9/1.6
LA158	49825870	7 – 100	136	10,000	1,400	1.25	137	1/4"	10	1.9	7.5	88.4	3.3/1.1
2102XP	16619686	34 – 54	68	11,000	1,250	0.63	165	1/4"	10	0.8	8.6	85.8	4.4/0.8
1/4" ■													
2101XP	16599466	34 – 54	68	11,000	1,250	0.63	165	1/4"	10	0.8	8.6	85.8	4.4/0.8

(1) ISO28927 – 3-axis measurement: vibration level/measurement uncertainty.

Air
1/2" Impactools™

2235QTiMAX – ring-type
2235QTi-2MAX – ring-type, long anvil 50 mm

Accessories:
2235M-BOOT
(CCN: 47520153001)
Protective tool boot

- MAX POWER with 1,220 Nm (900 ft-lb) of maximum torque in reverse and 1,760 Nm (1,300 ft-lb) of nut busting torque
- MAX DURABILITY with the titanium hammercase, the steel-wear plate and comosite housing
- MAX RELIABILITY backed by a two-year warranty

2235QXPA – ring-type

Accessories:
2235QXPA-BOOT
(CCN: 47536461001)
Protective tool boot

- 1,220 Nm (900 ft-lb) of maximum torque in reverse and 1,760 Nm (1,300 ft-lb) of nut busting torque

2130XP – ring-type
2130XP-TL – ring-type /torque-limited

Accessories:
2130-BOOT
(CCN: 45505369)
Protective tool boot

- 816 Nm (600 ft-lb) maximum torque in reverse
- Ergonomic composite housing is lightweight, protects from cold air and offers great operator comfort
- Full-stroke tease throttle
- Multi-position power management and Easy glide forward/reverse switch

2135QXPA – ring-type
2135QXPA-2 – ring-type, long anvil 50 mm

Accessories:
2135-BOOT
(CCN: 45505377)
Protective tool boot

- 1,057 Nm (780 ft-lb) of maximum torque in reverse and 1,490 Nm (1,075 ft-lb) of nut busting torque
- Quiet technology
- Only 1.80 kg
- 4-position power regulator and 1-hand forward and reverse switch

236 – ring-type

Accessories:
236-BOOT
(CCN: 45528148)
Protective tool boot

- 610 Nm (450 ft-lb) of maximum torque in reverse
- Pressure-fed lubrication
- Feather-touch trigger allows precise delivery of power and speed

231GXP – ring-type

Accessories:
231-BOOT
(CCN: 45505427)
Protective tool boot

- 610 Nm (450 ft-lb)
- Twin-hammer impact mechanism
- Steel hammer case
- 5-position power regulator

2125QTiMAX – ring-type

Accessories:
2115-BOOT
(CCN: 45505351)
Protective tool boot

- 450 Nm (332 ft-lb)
- Only 1.14 kg and 155 mm
- Twin-hammer impact mechanism
- Titanium hammer case and composite housing
- 1-hand forward and reverse switch

2125XP – ring-type

Accessories:
2115-BOOT
(CCN: 45505351)
Protective tool boot

- 410 Nm (302 ft-lb)
- Only 1.14 kg and 155 mm
- Twin-hammer impact mechanism
- Aluminum hammer case and composite housing
- 1-hand forward and reverse switch
- 4-position power regulator

2025MAX

Accessories:
2115M-BOOT
(CCN: 45602174)
Protective tool boot

- 244 Nm (180 ft-lb)
- Only 1.54 kg
- Jumbo-hammer impact mechanism
- Composite housing
- 2-position power regulator

Specifications at 6.2 bar (90 psi)

	CCN	Nm	Nm max	rpm	bpm	kg	Lenght mm	NPTF	Min. hose diameter mm	L/s	L/s max	dB(A)	m/s²/K(1)
1/2" ■													
2235QXPA	47532836001	–	1,220	8,500	1,220	2.10	193	1/4"	10	–	11.3	91.9	9.0/2.8
2235QTiMAX	47517574001	–	1,220	8,500	1,220	2.10	193	1/4"	10	–	11.3	91.9	9.0/2.8
2235QTi – 2MAX	47517884001	–	1,220	8,500	1,220	2.20	244	1/4"	10	–	11.3	91.9	7.7/2.7
2135QXPA	47517913001	68 – 746	1,057	9,800	1,250	1.80	187	1/4"	10	–	10.8	90.7	13.3/4.6
2135QXPA – 2	47517914001	68 – 746	1,057	9,800	1,250	1.90	241	1/4"	10	–	10.8	90.7	9.7/1.8
2130XP	80136112	34 – 474	816	9,500	1,200	1.90	187	1/4"	10	2.1	10.4	94.3	8.9/2.0
2130XP – TL	46812251	47 – 75(2)	816	7,800	1,150	1.90	187	1/4"	10	2.1	14.2	94.4	10.0/1.5
231GXP	10566255	34 – 407	610	8,000	1,200	2.63	185	1/4"	10	2.0	10.3	91.5	6.3/2.1
236	80171879	34 – 271	610	7,400	1,200	2.40	180	1/4"	10	2.0	11.3	90.3	12.0/1.0
2125QTiMAX	45587524	34 – 340	450	15,000	1,500	1.14	155	1/4"	10	1.9	8.0	93.2	7.5/1.8
2125XP	45632999	34 – 310	410	15,000	1,500	1.14	155	1/4"	10	1.9	8.0	94.0	7.5/1.8
2025MAX	47099247	61 – 190	244	7,100	2,100	1.54	332	1/4"	10	1.7	9.0	96.6	17.4/3.0

(1) ISO28927 – 3-axis measurement: vibration level/measurement uncertainty — (2) Torque-limited.

Air
1/2" Impactools™

2130XP-SK

2235QTiMAX-10SK

231GXP-K

236-SK

2135QXPA-10SK

1/2" Impactool™ Kits

	CCN	Contains:
2235QTiMAX-3SK	47521867001	2235QTiMAX + long impact sockets, insulated, thin-wall 1/2" (17, 19 and 21 mm)
2235QTiMAX-10SK	47521865001	2235QTiMAX + impact sockets 1/2" (10, 11, 12, 13, 14, 17, 19, 21, 22, and 24 mm)
2135QXPA-3SK	47521896001	2135QXPA + long impact sockets, insulated, thin-wall 1/2" (17, 19 and 21 mm)
2135QXPA-10SK	47521891001	2135QXPA + impact sockets 1/2" (10, 11, 12, 13, 14, 17, 19, 21, 22, and 24 mm)
2130XP+SK4M3L	17021346	2130XP + long impact sockets, insulated, thin-wall 1/2" (17, 19 and 21 mm)
2130XP-K	16985301	2130XP + impact sockets 1/2" (10, 11, 12, 13, 14, 17, 19, 21, 22, and 24 mm)
231GXP-K	17000639	231GXP + impact sockets 1/2" (10, 11, 12, 13, 14, 17, 19, 21, 22, and 24 mm)
236-SK	17020843	236 + impact sockets 1/2" (10, 11, 12, 13, 14, 17, 19, 21, 22, and 24 mm)

Service Kits

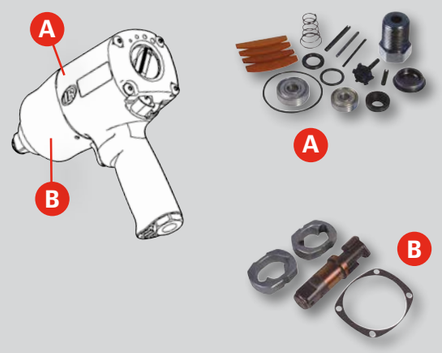

	A	B
2135QXPA	45535028	80119571
2135QXPA-2	45535028	80119662
2235QXPA	47517401001	47517319001
2235QTiMAX	47517401001	47517319001
2235QTi-2MAX	47517401001	47517319001
2130XP	80142375	80140528
1099XPA	16594160	16594392
1077XPA	80146491	16590424
1770	–	80147077
2125QTiMAX	45585189	45585932
2125XP	45585189	45585932
2025MAX	47100474	47100359

Air
3/4" Impactools™

2145QiMAX – short anvil
2145QiMAX-3 – long anvil 75 mm
2145QiMAX-6 – long anvil 150 mm

Accessories: **2145M-BOOT**
(CCN: 48385033)
Protective tool boot

Premium Impactool provides best-in-class performance and ergonomics to maximize productivity and user comfort. Its industrial-grade durability and low air consumption will also help minimize operating costs. It is the perfect tool for the most demanding applications, such as truck and bus service, construction and agricultural equipment maintenance, tire changing.

- 1,830 Nm (1,350 ft-lb) of maximum torque in reverse
- Ergonomic composite housing is lightweight, protects from cold air and offers great operator comfort
- The low weight of this tool will reduce operator fatigue
- 360° swivel inlet helps eliminating twisted hoses

2161XP – short anvil
2161XP-6 – long anvil 150 mm

Accessories: **2161-BOOT**
(CCN: 45505401)
Protective tool boot

- 1,695 Nm (1,250 ft-lb)
- Only 5.4 kg (2161XP)
- Twin-hammer impact mechanism
- Steel hammer case
- 3-position power regulator

261 – short anvil
261-3 – long anvil 75 mm
261-6 – long anvil 150 mm

Accessories: **261-BOOT**
(CCN: 45505468)
Protective tool boot

- 1,491 Nm (1,100 ft-lb)
- Jumbo-hammer impact mechanism
- Steel hammer case
- 5-position power regulator

259 – short anvil

Accessories: **259-BOOT**
(CCN: 45661899)
Protective tool boot

- 1,424 Nm (1,050 ft-lb)
- Only 4.0 kg and 218 mm
  Swinging-hammer impact mechanism
- 2-position power regulator

Service Kits

SK6M6L (CCN: 81297401)
long impact sockets 3/4"
(24, 27, 30, 32, 33 and 36 mm)

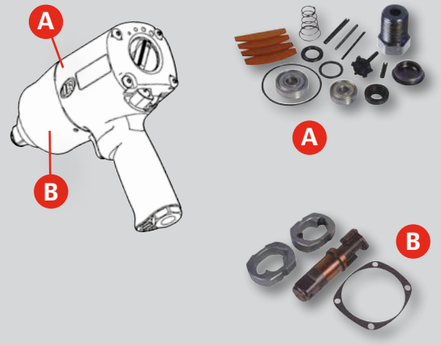

	A	B
2145QiMAX	47100011	47102561
2145QiMAX-3	47100011	47102561
2145QiMAX-6	47100011	47102561
2161XP	04621744	–
2161XP-6	04621744	–
261	03866597	22039259
261-3	03866597	–
261-6	03866597	–
259	45663796	45663853

Specifications at 6.2 bar (90 psi)

	CCN	Nm	Nm max	rpm	bpm	kg	Lenght mm	NPTF	Min. hose diameter mm	L/s	L/s max	dB(A)	m/s²/K(1)
3/4"													
2145QiMAX	45624327	271 – 1,220	1,830	6,300	1,150	3.35	217	3/8"	13	4.0	15.1	96.3	8.7/2.7
2145QiMAX – 3	47119524	271 – 1,220	1,830	6,300	1,150	3.79	293	3/8"	13	4.0	15.1	96.3	8.1/1.2
2145QiMAX – 6	47121454	271 – 1,220	1,830	6,300	1,150	4.23	369	3/8"	13	4.0	15.1	96.3	8.1/1.2
2161XP	01372085	407 – 1,356	1,695	6,000	1,025	5.35	216	3/8"	13	4.7	21.5	94.7	9.8/1.8
2161XP – 6	01372093	407 – 1,356	1,695	6,000	1,025	5.94	370	3/8"	13	4.7	21.5	94.7	9.8/1.8
261	01209758	271 – 813	1,491	5,500	1,000	5.62	224	3/8"	13	4.5	17.9	98.1	10.4/1.3
261 – 3	01211101	271 – 813	1,491	5,500	1,000	5.90	300	3/8"	13	4.5	17.9	98.1	10.4/1.3
261 – 6	01217199	271 – 813	1,491	5,500	1,000	6.21	376	3/8"	13	4.5	17.9	98.1	10.4/1.3
259	45631918	271 – 1,085	1,424	6,500	1,000	4.00	218	3/8"	10	3.8	14.2	91.6	6.4/0.8

(1) ISO28927 – 3-axis measurement: vibration level/measurement uncertainty.

Air
1″ Air Impactools™/Pistol Handle

295A – short anvil
295A-6 – long anvil 150 mm

Accessories: **295-BOOT**
(CCN: 45505484)
Protective tool boot

- Designed for operation at 8.3 bar
- 2400 Nm (1,700 ft-lb) at 8.3 bar
- Swinging-hammer impact mechanism
- 3-position power regulator

2171XP – short anvil
2171XP-6 – long anvil 150 mm

Accessories: **2161-BOOT**
(CCN: 45505401)
Protective tool boot

- 1,695 Nm (1,100 ft-lb)
- Only 5.47 kg (2171XP)
- Twin-hammer impact mechanism
- Steel hammer case
- 3-position power regulator

Service Kits

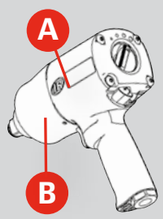

	A	B
295A	16590242	–
295A-6	16590242	–
2155QiMAX	47100011	47102561
2171XP	04621744	80137698
2171XP-6	04621744	80137714
271	03866597	–

2155QiMAX

Accessories: **2145M-BOOT**
(CCN: 48385033)
Protective tool boot

Premium Impactool provides best-in-class performance and ergonomics to maximize productivity and user comfort. Its industrial-grade durability and low air consumption will also help minimize operating costs. It is the perfect tool for the most demanding applications, such as truck and bus service, construction and agricultural equipment maintenance, tire changing.

- 1,830 Nm (1,350 ft-lb) of maximum torque in reverse
- Ergonomic composite housing is lightweight, protects from cold air and offers great operator comfort
- The low weight of this tool will reduce operator fatigue
- 360° swivel inlet helps eliminating twisted hoses

271 – short anvil

Accessories: **261-BOOT**
(CCN: 45505468)
Protective tool boot

- 1,491 Nm (1,100 ft-lb)
- Jumbo-hammer impact mechanism
- Steel hammer case
- 5-position power regulator

Specifications at 6.2 bar (90 psi)

	CCN	Nm	Nm max	rpm	bpm	kg	Lenght mm	NPTF	Min. hose diameter mm	L/s	L/s max	dB(A)	m/s²/K(1)
1"													
295A	80159015	136 – 1,220	2,400(2)	5,000	700	9.98	290	1/2"	13	4.7	17.5	97.0	8.6/1.0
295A-6	16578734	136 – 1,220	2,400(2)	5,000	700	11.4	449	1/2"	13	4.7	17.5	97.0	9.1/2.9
2155QiMAX	47123450	271 – 1,220	1,830	6,300	1,150	3.36	225	3/8"	13	4.0	15.1	96.3	8.7/2.7
2171XP	01378165	407 – 1,356	1,695	6,000	1,025	5.47	226	3/8"	13	4.7	21.5	94.7	10.3/1.3
2171XP-6	16619801	407 – 1,356	1,695	6,000	1,025	6.76	360	3/8"	13	4.7	21.5	94.7	9.9/3.0
271	01209766	271 – 1,224	1,491	5,500	1,000	5.67	226	3/8"	13	4.5	17.9	98.1	13.2/1.1

(1) ISO28927 – 3-axis measurement: vibration level/measurement uncertainty — (2) at 8.3 bar (90 psi)

Air
1" Air Impactools™/Rear Handle

631L – 200 mm anvil

The 631L Impactool delivers exceptional power and rugged durability in a convenient, easy-touse package. It is the perfect tool for the most demanding applications, such as truck and bus service, construction and agricultural equipment maintenance, tire changing.

- 4,300 Nm (3,172 ft-lb) of maximum torque
- Ergonomic auxiliary handle provides excellent maneuverability
- 4-position power regulator and forward/reverse control

4,300 Nm!

285B – Short anvil
285B-6 – 150 mm anvil

- Designed for operation at 8.3 bar
- 2,400 Nm (1,700 ft-lb) at 8.3 bar
- Swinging-hammer impact mechanism
- 3-position power regulator

Specifications at 6.2 bar (90 psi)

	CCN	Nm	Nm max	rpm	bpm	kg	Lenght mm	NPTF	Min. hose diameter mm	L/s	L/s max	dB(A)	$m/s^2/K$ (1)
1" ■													
631L	80183171	271 – 3,390	4,300	3,500	700	16.6	624	1/2"	13	7.1	26.4	108.4	12.7/2.5
2190Ti	01390459	204 – 1,356	2,237	6,800	875	6.13	393	1/2"	13	5.6	27.4	103.8	10.4/1.5
2190Ti-6	01390467	204 – 1,356	2,237	6,800	875	7.04	522	1/2"	13	5.6	27.4	103.8	12.7/2.9
2190DTi-6	01390475	204 – 1,356	2,237	6,800	875	7.26	475	1/2"	13	5.6	27.4	103.8	8.7/2.1
280-EU	01343193	203 – 1,356	2,169	6,000	750	9.98	330	1/2"	13	4.7	26.0	109.1	24.1/3.4
280-6-EU	01343144	203 – 1,356	2,169	6,000	750	10.8	470	1/2"	13	4.7	26.0	109.1	21.8/3.8
285B	80157209	136 – 1,220	2,400(2)	5,000	700	11.2	360	1/2"	13	4.7	17.5	99.8	8.0/1.2
285B-6	80157233	136 – 1,220	2,400(2)	5,000	700	12.6	519	1/2"	13	4.7	17.5	99.8	9.0/2.7

(1) ISO28927 – 3-axis measurement: vibration level/measurement uncertainty — (2) at 8.3 bar (90 psi).

2190Ti – Short anvil, ergonomic chainsaw-type handle
2190Ti-6 – 150 mm anvil, ergonomic chainsaw-type handle
2190DTi-6 – 150 mm anvil, rear handle

Accessories:
2190-BOOT
(CCN: 45505419)
Protective tool boot

- 2,237 Nm (1,650 ft-lb)
- Only 6.13 kg (2190Ti)
- Twin-hammer impact mechanism
- Titanium hammer case
- 3-position power regulator

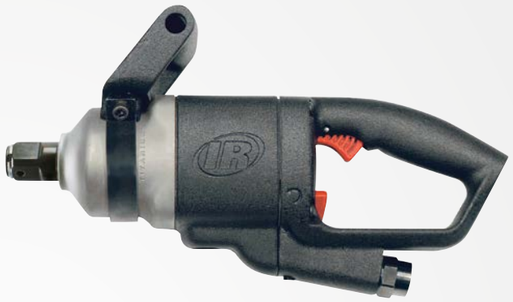

280-EU – Short anvil
280-6-EU – 150 mm anvil

- 2,169 Nm (1,600 ft-lb)
- Jumbo-hammer impact mechanism

Service Kits

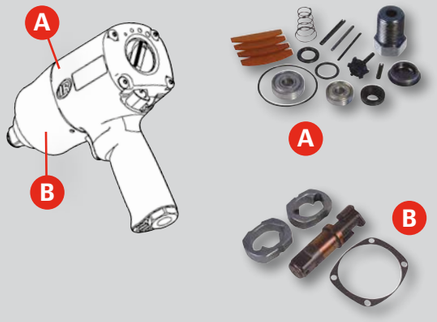

	A	B
631L	45766789	–
2190Ti	80137383	80137698
2190Ti-6	80137383	80137714
2190DTi-6	80137383	80137714
280-EU	03866605	–
280-6-EU	03866605	–
285B	16578965	–
285B-6	16578965	–

Air
Impactools™/Accessories

Sockets Features

Genuine Ingersoll Rand impact sockets are built of top quality materials for performance and durability.

Specifically designed for use with Ingersoll Rand power tools, our sockets are the perfect solution for your everyday tightening and loosening applications.

Square Drive Socket Sets 3/8"

SK3M10

(CCN: 81287344) 3/8" socket set
(9, 10, 11, 12, 13, 14, 15, 16, 17 and 19 mm)

Square Drive Socket Sets 1/4"

SK2M12

(CCN: 81287336) 1/4" socket set
(6, 7, 8, 9, 10, 11, 12, 13 and 14 mm,
50 and 100 mm extensions, 3/8"F x 1/4"M adapter)

Square Drive Socket Sets 3/4"

SK6M6L

Contains 6 deep sockets
(24, 27, 30, 32, 33 and 36 mm)

Square Drive Socket Sets 1/2"

SK4M14

Contains 14 standard sockets (10, 11, 12, 13, 14, 15, 16, 17, 18, 19, 21, 22, 23 and 24 mm)

SK4M5L

Contains 5 deep sockets (17, 19, 21, 22 and 24 mm)

SK4M3L

Contains 3 deep insulated, thin wall sockets (17, 19 and 21 mm)

SK4M7U

1/2" square drive sockets (13, 14, 15, 17, 19, 21 and 22 mm), pre-fitted on power joints – to facilitate handling nuts and bolts in areas with very limited accessibility

SK4M18

(CCN: 81287385)
1/2" socket set. Contains 9 standard sockets (10, 11, 13, 14, 17, 19, 21, 22 and 24 mm), 4 deep sockets (13, 14, 21,and 24 mm), 3 deep/thin wall sockets (17, 19 and 21 mm), 125 mm extension bar and 1/2" square drive power joint

Square Drive Socket Sets 1"

SK8M4L

Contains 4 deep sockets
(27, 30, 32 and 33 mm)

Impact Socket Extensions

	Square drive	Length (mm)	Recommended retaining ring
E24H	1/4"	100	–
E26H	1/4"	150	–
E33H	3/8"	75	RR10003
E36H	3/8"	150	RR10003
E312H	3/8"	300	RR10003
E43H	1/2"	75	RR10006
E45H	1/2"	125	RR10006
E47H	1/2"	175	RR10006
E410H	1/2"	250	RR10006
E424H	1/2"	600	RR10006

	Square drive	Length (mm)	Recommended retaining ring
E63H	3/4"	75	RR10034S
E67H	3/4"	175	RR10034S
E610H	3/4"	250	RR10034S
E413H	3/4"	330	RR10034S
E83H	1"	75	RR10015S
E87H	1"	175	RR10015S
E810H	1"	250	RR10015S
E813H	1"	330	RR10015S
E125H	11/2"	125	RR10025S
E1210H	11/2"	250	RR10025S
E1220H	11/2"	500	RR10025S

Universal Joints

Universal Joint

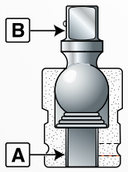

	A (mm)	B (mm)	Recommended retaining ring
J2	1/4"	1/4"	–
J3	3/8"	3/8"	–
J4	1/2"	1/2"	–
J6	3/4"	3/4"	RR10034S
J8	1"	1"	RR10015S
J12	11/2"	11/2"	RR10025S
J20	21/2"	21/2"	RR10035S

Adapters

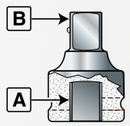

	A (mm)	B (mm)	Recommended retaining ring
A2F3M	1/4"	3/8"	–
A3F2M	3/8"	1/4"	RR10003
A3F4M	3/8"	1/2"	RR10003
A4F3M	1/2"	3/8"	RR10006
A4F6M	1/2"	3/4"	RR10008
A6F4M	3/4"	1/2"	RR10034S
A6F8M	3/4"	1"	RR10034S
A8F6M	1"	3/4"	RR10015S
A8F12M	1"	11/2"	RR10015S
A12F8M	11/2"	1"	RR10025S
A12F20M	11/2"	21/2"	RR10025S
A20F12M	2"	11/2"	RR10035S

Air Sanders and Polishers

8000 Series

In keeping with the tradition of Ingersoll Rand MAX tools, 8000MAX-Series random orbital sanders deliver MAX power and MAX productivity for all of your body, prep, and finishing work – and now offer a new level of MAX comfort, with less vibration and a lightweight ergonomic design.

MAX Comfort: low vibration and lightweight ergonomic desing reduced operator fatigue.

MAX Power: powerful 0.20 kW motor and variable-speed regulator deliver the performance required for ALL of your finishing jobs.

MAX Productivity: reduced vibration and improved stability increase abrasive pad life and help create a smoother finish.

8102MAX

8202MAX

Pad wrench storage

Air flow valve

Technical Specifications at 6.2 bar (90 psi) dynamic pressure at inlet

	CCN	Wheel diameter mm	Orbital movement mm	bolt	kW	rpm	kg	Lenght mm	NPTF	Min. hose diameter mm	L/s	dB(A)	$m^2/s^2/K^{(3)}$
Vacuum-Ready Sanders													
8201MAX	48622005	150 (1)	2.5	M8	0.20	11,500	0.75	92	1/4"	8	6.0	76.0	7.2/2.4
8202MAX	48622013	150 (1)	5.0	M8	0.20	10,500	0.75	92	1/4"	8	6.0	76.0	6.9/2.3
8203MAX	48622021	150 (1)	10.0	M8	0.20	9,500	0.80	92	1/4"	8	6.0	76.0	6.8/2.2
Non-Vacuum Sanders													
8101MAX	8101MAX	150 (2)	2.5	M8	0.20	11,500	0.75	92	1/4"	8	6.0	76.0	7.2/2.4
8102MAX	8102MAX	150 (2)	5.0	M8	0.20	10,500	0.75	92	1/4"	8	6.0	76.0	6.9/2.3
8103MAX	8103MAX	150 (2)	10.0	M8	0.20	9,500	0.75	92	1/4"	8	6.0	76.0	6.8/2.2

(1) Hock and loop backing pad
(2) For PSA backed discs
(3) ISO28927 – 3-axis measurement: vibration level/measurement uncertainty

Replacement sanding pads

	CCN	Description
Vacuum-Ready Sanders		
8000MAX-750	48621940	Plateau de rechange auto-agrippant 150 mm + vis
8000MAX-700	48621932	Plateau de rechange autocollant 150 mm + vis

Air
Sanders & Polishers

3103XP – Tool only
3103K – Kit

- Ø 75 mm (3 in)
- 0.15 kW (0.2 HP)
- 15,000 rpm
- Only 0.45 kg and 125 mm
- Composite housing
- 2-position power regulator

3128XP – Tool only
3128K – Kit

- Ø 75 mm (3 in)
- Orbit: 5 mm (3/16 in)
- 0.15 kW (0.2 HP)
- 15,000 rpm
- Only 0.50 kg and 140 mm
- Composite housing
- 2-position power regulator

3129XP – Tool only
3129K – Kit

- Ø 75 mm (3 in)
- 0.22 kW (0.3 HP)
- 6,000 rpm
- Only 0.60 kg and 152 mm
- Composite housing
- 2-position power regulator

Accessories

50 and 75 mm quick-change pads & abrasives

75 mm (3") hook-and-loop pad, discs & bonnets

CCN	Description	Qty.
50 mm (2") Diameter		
80199177	Quick-change pad with 1/4" mandrel	1
16593386	Coarse coating removal discs	25
16593428	Medium coating removal discs	25
80207574	Quick-strip discs	25
80215023	Aluminum oxide sanding discs, grit 36	25
16593196	Aluminum oxide sanding discs, grit 80	25
75 mm (3") Diameter		
80198963	Quick-change pad with 1/4" mandrel	1
80206238	Coarse coating removal discs	25
80206220	Medium coating removal discs	25
80216690	Quick-strip discs	10
16593238	Aluminum oxide sanding discs, grit 36	25
16593253	Aluminum oxide sanding discs, grit 80	25

CCN	Description	Qty.
Backer pad		
80199136	Backer pad Ø 75 mm (3 in), hook & loop	1
Aluminum oxide sanding discs		
80207582	Grit 40	50
80206279	Grit 100	50
80206295	Grit 180	50
80206303	Grit 220	50
80206329	Grit 320	50
80206352	Grit 500	50
80205404	Grit 800	50
Polishing Bonnets		
80206170	Wool bonnet (for compounding)	6
80206188	Waffle bonnet/white (for compounding)	6
80206196	Waffle bonnet/yellow (for polishing)	6

Specifications at 6.2 bar (90 psi)

	CCN	Torque Nm	Spindle thread Nm	rpm	BPM	kg	Lenght mm	NPTF	Min. hose diameter mm	L/s	L/s max	dB(A)	$m/s^2/K^{(1)}$
Air Sanders													
3103XP	16619595	75	1/4" – 20	0.15	15,000	0.45	125	1/4"	10	1.0	9.2	84.9	3.5/1.3
3128XP	16599458	75	5/16" – 24	0.15	15,000	0.50	140	1/4"	10	1.0	6.9	78.2	5.2/0.9
Air													
3129XP	16599441	75	5/16" – 24	0.22	6,000	0.60	152	1/4"	10	1.0	9.4	83.5	3.5/1.3

(1) ISO28927 – 3-axis measurement: vibration level/measurement uncertainty.

Air
Sanders & Polishers

4151-HL – Ø 150 mm (6 in), orbit 5 mm (3/16 in)

4151-HL-2 – Ø 150 mm (6 in), orbit 5 mm (3/16 in)

4152-HL – Ø 150 mm (6 in), orbit 2.5 mm (3/32 in)

4152-HL-SR – Ø 75 mm (3 in), orbit 2.5 mm (3/32 in)

- 0.15 kW (0.20 HP)
- 12,000 rpm
- Only 0.86 kg
- Composite housing
- Auto-balancer
- Power regulator

311A

- Ø 150 mm (6 in)
- Orbit: 5 mm (3/16 in)
- 0.19 kW (0.25 HP)
- 10,000 rpm
- Power regulator

317A

- Ø 75 mm and 125 mm (3 & 5 in)
- 0.35 kW (0.45 HP)
- 18,000 rpm
- Power regulator

312A

- 93 x 171 mm (3.67 x 6.75 in)
- 0.22 kW (0.30 HP)
- 8,000 strokes per minute

315-EU

- 70 x 445 mm (2.75 x 17.5 in)
- 3,000 strokes per minute

313A – 5,000 rpm
314A – 2,500 rpm

- Ø 180 mm (7 in)
- 0.37 kW (0.5 HP)

318A – 2,500 rpm
319A – 5,000 rpm

Accessories: **P500-850**
(CCN: 03379542)
Wool polishing bonnet
for 314A and 318A

- Ø 180 mm (7 in)
- 0.6 kW (0.8 HP)

Accessories for 4151 and 4152

	CCN	Description
4151JV	04662896	Jet-Vac conversion kit
49988	04324455	Dust collection bags (20 pieces)
49987	04324448	Dust collection bags (250 pieces)
4151-747B	80095151	Rubber grip
4151-2-747BLK	22041941	Rubber grip, long handle

	CCN	Description
49801	04248571	Rubber grip, small
49798	04248555	Rubber grip, medium
49799	04248563	Rubber grip, large
49840	04252938	Rubber grips (3 pieces: small, medium and large)

	CCN	Torque Nm	Spindle thread Nm	rpm	BPM	kg	Lenght mm	NPTF	Min. hose diameter mm	L/s	L/s max	dB(A)	$m/s^2/K^{(1)}$
Air Sanders													
4151-HL	01371624	150	5/16" – 24	0.15	12,000	0.86	190	1/4"	8	3.7	7.2	81.6	7.5/1.6
4151-HL-2	22041198	150	5/16" – 24	0.15	12,000	1.12	252	1/4"	8	3.7	7.2	81.6	6.2/1.0
4152-HL	80134356	150	5/16" – 24	0.15	12,000	0.86	190	1/4"	8	3.7	7.2	81.6	8.2/1.7
4152-HL-SR	16674301	75	5/16" – 24	0.15	12,000	0.84	155	1/4"	8	3.7	7.2	81.6	4.7/1.3
311A	01365253	150	5/16" – 24	0.19	10,000	1.90	248	1/4"	10	8.0	11.8	84.3	32.3/5.6
312A	80147101	93 x 171	–	0.22	8,000	2.09	171	1/4"	10	4.3	5.7	86.0	7.7/1.5
313A	80141021	180	5/8" – 11	0.37	5,000	2.04	406	1/4"	10	3.8	13.7	88.0	< 2.5
315-EU	01343961	70 x 445	–	N/A	3,000	2.77	445	1/4"	10	3.8	4.3	93.3	20.5/1.6
317A	80090863	125	7/16" – 20	0.35	18,000	1.05	104	1/4"	10	5.7	11.8	86.7	3.3/0.8
319A	80141054	180	5/8" – 11	0.60	5,000	2.05	203	1/4"	10	2.8	9.9	85.0	< 2.5
Air													
314A	80141039	180	5/8" – 11	0.37	2,500	1.90	406	1/4"	10	3.8	13.7	87.0	< 2.5
318A	80141047	180	–	0.60	2,800	2.05	203	1/4"	10	2.8	9.9	85.0	< 2.5

(1) ISO28927 – 3-axis measurement: vibration level/measurement uncertainty.

Air
Die Grinders

Accessories: **LG1-K284**
(CCN: 80152119)
Piped-away exhaust system

- 0.25 – 0.30 kW (0.33 – 0.40 HP)
- Composite housing
- Contains: 1/4" and 6 mm collets

5108MAX

- 0.30 kW (0.40 HP)
- 25,000 rpm
- Only 0.46 kg and 172 mm
- Composite housing
- Contains: 1/4" and 6 mm collets

5102MAX

- 0.30 kW (0.40HP)
- 20,000 rpm
- Only 0.64 kg and 178 mm
- Composite housing
- Contains: 1/4" and 6 mm collets

308B

- 0.25 kW (0.33 HP)
- 25,000 rpm
- Only 0.46 kg and 172 mm
- Contains: 1/4" and 6 mm collets

302B

- 0.25 kW (0.33 HP)
- 20,000 rpm
- Only 0.58 kg and 175 mm
- Contains: 1/4" and 6 mm collets

307B

- 0.19 kW (0.25 HP)
- 28,000 rpm
- Only 0.33 kg and 125 mm
- Contains: 1/4" and 6 mm collets

301B

- 0.19 kW (0.25 HP)
- 21,000 rpm
- Only 0.46 kg and 128 mm
- Contains: 1/4" and 6 mm collets

LA429-EU

- 0.42 kW (0.54 HP)
- 22,000 rpm
- Only 0.54 kg
- Contains: 3 mm & 6 mm collets, and 10 shank-mounted stones

Replacement collets

	CCN	diameter
Collets (Erickson) for 3…C4A		
DG110-700-G2	03641743	Ø 1/8"
DG110-700-6MM	04261053	Ø 6 mm
DG110-700-G4	03641602	Ø 1/4"
Collets for 301B, 302B, 307B, 308B, 5102MAX, 5108MAX and LA429-EU		
301-700C	80128952	Ø 1/8"
301-700B	04552600	Ø 6 mm
301-700	80102346	Ø 1/4"

Specifications at 6.2 bar (90 psi)

	CCN	Collet	kW	rpm	kg	Lenght mm	NPTF	Min. hose diameter mm	L/s	L/s max	dB(A)	$m/s^2/K$ (1)
Straight Grinders												
335SC4A	45763489	6mm + 1/4"	0.28	35,000	0.40	166	1/4"	10	3.8	14.2	78.4	3.0/0.8
330SC4A	45762390	6mm + 1/4"	0.25	30,000	0.40	166	1/4"	10	3.8	14.2	77.2	3.8/1.9
330XC4A	45763547	6mm + 1/4"	0.25	30,000	0.62	244	1/4"	10	3.8	14.2	80.2	< 2.5
325SC4A	45752366	6mm + 1/4"	0.30	25,000	0.40	166	1/4"	10	3.8	15.1	78.6	2.6/1.1
325XC4A	45763521	6mm + 1/4"	0.30	25,000	0.62	244	1/4"	10	3.8	15.6	78.6	< 2.5
5108MAX	48488340	6mm + 1/4"	0.30	25,000	0.46	172	1/4"	10	2.8	11.8	83.3	1.8/0.8
308B	48488332	6mm + 1/4"	0.25	25,000	0.46	172	1/4"	10	3.3	13.2	92.0	3.7/1.2
307B	48488316	6mm + 1/4"	0.19	28,000	0.33	125	1/4"	10	2.8	11.3	83.0	4.5/1.1
LA429-EU	01328558	3mm + 6mm	0.42	22,000	0.54	142	1/4"	10	1.8	9.4	91.0	3.2/1.7
Angle Grinders												
320AC4A	45763471	6mm + 1/4"	0.30	20,000	0.55	170	1/4"	10	3.8	15.1	78.6	2.5/1.1
314AC4A	45763455	6mm + 1/4"	0.25	14,000	0.55	170	1/4"	10	3.8	14.2	80.2	3.2/0.7
312AC4A	45754595	6mm + 1/4"	0.30	12,000	0.55	170	1/4"	10	3.8	15.1	78.6	3.4/1.0
5102MAX	48488357	6mm + 1/4"	0.30	20,000	0.64	180	1/4"	10	2.8	11.8	84.1	3.3/1.1
302B	48488365	6mm + 1/4"	0.25	20,000	0.58	175	1/4"	10	2.8	10.8	90.0	5.5/1.5
301B	48488308	6mm + 1/4"	0.19	21,000	0.46	128	1/4"	10	2.8	11.3	91.8	5.9/1.0

(1) ISO28927 – 3-axis measurement: vibration level/measurement uncertainty.

Air
Wheel Grinders and Cutting Tools

345MAX-M
Ø 125 mm (5 in)

3445MAX-M
Ø 115 mm (4.5 in)

- 0.66 kW (0.88 HP)
- 12,000 rpm
- Speed governor
- Composite housing
- Piped-away exhaust system

LA422-EU – Ø 125 mm (5 in)
LA421-EU – Ø 100 mm (4 in)

- 0.50 kW (0.65 HP)
- 12,000 rpm

Specifications at 6.2 bar (90 psi)

	CCN	Nm	Nm	rpm	BPM	kg	mm	NPTF	mm	L/s	L/s	dB(A)	m/s²/K(1)
345MAX-M	45664257	125	M14	0.66	12,000	1.56	245	1/4"	10	4.9	19.3	79.6	7.9/0.7
3445MAX-M	45664240	115	M14	0.66	12,000	1.53	245	1/4"	10	4.9	19.3	79.6	6.4/2.0
LA422-EU	01328582	125	3/8" – 24	0.50	12,000	1.75	229	1/4"	10	2.8	10.4	85.6	6.0/2.1
LA421-EU	01328632	100	3/8" – 24	0.50	12,000	1.75	229	1/4"	10	2.8	10.4	85.6	4.8/1.4

(1) ISO28927 – 3-axis measurement: vibration level/measurement uncertainty.

529

- Stroke: 10 mm (0.4 in)
- 9,500 strokes per minute
- Only 0.54 kg
- Variable speed lever
- 360° adjustable exhaust
- Contains: blades (6 pieces)

7802SA

- Cutting capacity:
  1.0 mm (20-gauge, 0.04 in)
- 4,200 blows per minute

4429

Accessories:
P4FS-6 (CCN: 45525474)
Blades, 12 teath/cm (6 pieces)
P4CS-6 (CCN: 45525508)
Blades, 10 teath/cm (6 pieces)

- Stroke: 10 mm (0.4 in)
- 5,000 strokes per minute
- Variable speed lever
- Piped-away exhaust system

325B

- Cutting capacity:
  1.2 mm (18-gauge, 0.05 in)
- 4,200 blows per minute
- Variable speed lever

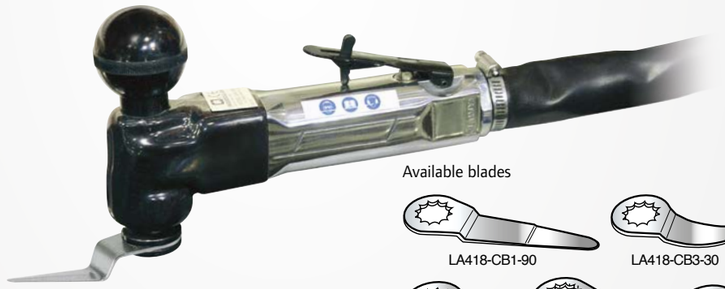

LA418A-EU

- 8,000 strokes per minute
- Variable speed lever
- Piped-away exhaust system
- Supplied without blades

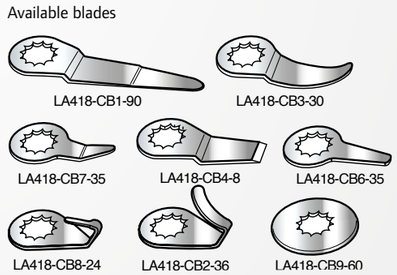

Specifications at 6.2 bar (90 psi)

	CCN	BPM	Piston stroke	kg	Lenght mm	NPTF	Min. hose diameter mm	L/s	L/s max	dB(A)	m/s²/K(1)
4429	01371822	5,000	10 mm	0.74	234	1/4"	6	1.9	3.6	66.2 (2)	9.5/2.4
529	47125885	9,500	10 mm	0.70	246	1/4"	6	0.5	0.5	84.3	3.1/1.0
325B	49806568	4,200	–	0.95	185	1/4"	10	1.9	8.0	96.0	15.9/1.9
7802SA	80113681	4,200	–	1.27	239	1/4"	10	1.9	9.9	83.0	3.0/1.0
LA418A-EU	01336353	20,000	3°	1.00	208	1/4"	10	1.8	12.3	90.8 (2)	6.7/2.5

(1) ISO28927 – 3-axis measurement: vibration level/measurement uncertainty — (2) Piped-away exhaust system.

Air
Drills

7804XP

- 6.5 mm (1/4 in)
- 0.12 kW (0.17 HP)
- 1,600 rpm
- Only 0.6 kg and 180 mm
- Composite housing
- Reversible

7803A – Standard chuck
7803AKC – Keyless chuck
7803RA – Standard chuck, reversible
7803RAKC – Keyless chuck, reversible

Accessories: **7803-BOOT**
(CCN: 45524287)
Protective tool boot

- 13 mm (1/2 in) chuck
- 0.37 kW (0.50 HP) – 500 rpm

7807R-EU

- 10 mm (3/8 in) standard chuck
- 0.25 kW (0.33 HP) – 2,000 rpm
- Reversible

LA410-EU

Accessories: **327LS-K284**
(CCN: 10323095)
Piped-away exhaust system

- 10 mm (3/8 in) standard chuck
- 0.25 kW (0.33 HP) – 4,500 rpm

7802A – Standard chuck
7802AKC – Keyless chuck
7802RA – Standard chuck, reversible
7802RAKC – Keyless chuck, reversible

Accessories: **7802-BOOT**
(CCN: 45524279)
Protective tool boot

- 10 mm (3/8 in) chuck
- 0.37 kW (0.50 HP) – 2,000 rpm

Specifications at 6.2 bar (90 psi)

	CCN	mm	Nm	kW	rpm	kg	mm	NPTF	mm	L/s	L/s	dB(A)	m/s²/K(1)
Air Drills													
7803A	80113632	13	28	0.37	500	1.63	195	1/4"	10	1.9	12.7	83.0	< 2.5
7803AKC	10563724	13	28	0.37	500	1.63	200	1/4"	10	1.9	12.7	83.0	< 2.5
7803RA	80113673	13	28	0.37	500	1.64	195	1/4"	10	1.9	12.7	83.0	< 2.5
7803RAKC	10563732	13	28	0.37	500	1.64	200	1/4"	10	1.9	12.7	83.0	< 2.5
7802A	80113616	10	7	0.37	2,000	1.31	163	1/4"	10	1.9	12.3	83.0	2.8/0.7
7802AKC	10563716	10	7	0.37	2,000	1.35	175	1/4"	10	1.9	12.3	83.0	2.8/0.7
7802RA	80113640	10	7	0.37	2,000	1.30	163	1/4"	10	1.9	12.3	83.0	2.8/0.7
7802RAKC	80147424	10	7	0.37	2,000	1.36	175	1/4"	10	1.9	12.3	83.0	2.8/0.7
7807R-EU	01352160	10	5	0.25	1,800	1.07	206	1/4"	10	1.9	8.1	89.2	< 2.5
LA410-EU	01328616	10	2	0.25	4,500	0.91	228	1/4"	10	1.4	12.8	84.9	2.9/0.7
7804XP	16599433	6.5	3	0.12	1,600	0.80	180	1/4"	10	0.9	8.3	83.6	3.0/0.8

(1) ISO28927 – 3-axis measurement: vibration level/measurement uncertainty.

Tyre Buffers

327LS

- 0.38 kW (0.50 HP)
- 3,000 rpm
- Only 0.50 kg
- Piped-away exhaust system

22 000 rpm

327-EU

Accessories: **327LS-K284**
(CCN: 10323095)
Piped-away exhaust system

- 10 mm (3/8 in) standard chuck
- 0.38 kW (0.50 HP)
- Only 0.73 kg

Specifications at 6.2 bar (90 psi)

	CCN	Collet	kW	rpm	kg	Lenght mm	NPTF	Min. hose diameter mm	L/s	L/s max	dB(A)	m/s²/K(1)
Air Tyre Buffers												
327LS	01371699	7/16"⬡	0.38	3,000	0.50	216	1/4"	10	6.6	12.6	77.4(2)	< 2.5
327-EU	01343771	10 mm	0.38	22,000	0.73	224	1/4"	10	7.1	12.6	87.9	4.6/1.1

(1) ISO28927 – 3-axis measurement: vibration level/measurement uncertainty — (2) Piped-away exhaust system.

Air
Screwdrivers – Specialty Air Tools

2101XP-QC

- 68 Nm (50 ft-lb)
- 1,250 blows per minute
- 11,000 rpm
- Only 0.66 kg and 165 mm
- Composite housing
- 1-hand forward and reverse switch
- Swinging-hammer

LA439-EU

- 13 Nm (9.6 ft-lb)
- 0.25 kW (0.33 HP)
- 1,800 rpm
- Adjustable clutch
- 1-hand forward and reverse switch

LA412-EU

- 13 Nm (9.6 ft-lb)
- 0.25 kW (0.33 HP)
- 1,800 rpm
- Positive jaw clutch
- 1-hand forward and reverse switch

371-EU

- 13 Nm (9.6 ft-lb)
- 0.25 kW (0.33 HP)
- 1,800 rpm
- Positive jaw clutch
- 1-hand forward and reverse switch

LA413-EU

- 13 Nm (9.6 ft-lb)
- 0.25 kW (0.33 HP)
- 1,800 rpm
- Adjustable clutch
- 1-hand forward and reverse switch

Specifications at 6.2 bar (90 psi)

	CCN	Nm	kW	rpm	BPM	kg	Lenght mm	NPTF	Min. hose diameter mm	L/s	L/s max	dB(A)	m/s²/K(1)
Air Screwdrivers													
2101XP-QC	16619652	68	–	11,000	1 250	0.66	165	1/4"	10	0.8	8.6	85.8	3.3/0.7
LA439-EU	01330133	13	0.25	1,800	–	1.60	216	1/4"	10	1.4	13.7	89.9	< 2.5
LA412-EU	01330075	13	0.25	1,800	–	1.50	184	1/4"	10	1.9	13.7	89.6	< 2.5
371	01352152	13	0.25	1,800	–	1.14	188	1/4"	10	1.9	10.2	91.0	< 2.5
LA413-EU	01330109	13	0.25	1,800	–	1.10	260	1/4"	10	1.4	8.0	109.1	< 2.5

(1) ISO28927 – 3-axis measurement: vibration level/measurement uncertainty.

LA428-EU

- Power regulator
- Cartridge size:
  50 x 215 mm (2 x 8.5 in)

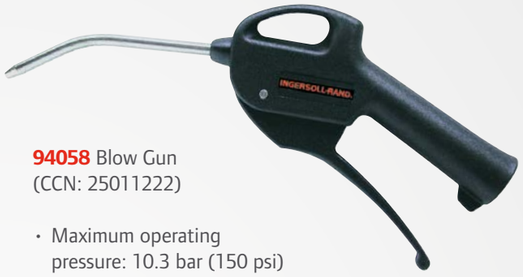

94058 Blow Gun
(CCN: 25011222)

- Maximum operating pressure: 10.3 bar (150 psi)
- Flow 6.4 L/s.
- Air inlet diameter: 1/4" BSP

LA415-EU

- Aluminum rivet capacity:
  2.4 – 6.35 mm
  (3/32 – 1/4 in)
- Stroke: 16 mm (0.63 in)

LA437-EU

- Aluminum rivet capacity:
  2.4 – 4.75 mm
  (3/32 – 3/16 in)

Specifications at 6.2 bar (90 psi)

	CCN	Shank diamter	Piston stroke	kg	Lenght mm	NPTF	Min. hose diameter mm	L/s max	dB(A)	m/s²/K(1)
Air Caulking Gun										
LA428-EU	01330067	–	215	1.3	356	1/4"	10	–	< 70.0	< 2.5
Air Riveters										
LA437-EU	01328608	2.4 – 4.75	16	2.8	164	1/4"	10	0.03 (2)	89.0	3.2/0.7
LA415-EU	01330141	2.4 – 6.35	16	2.0	197	1/4"	10	0.03 (2)	86.8	< 2.5

(1) ISO28927 – 3-axis measurement: vibration level/measurement uncertainty — (2) Per cycle.

Air
Hammers

118MAX – Round shank
118MAXH – Hexagonal shank

- Stroke: 89 mm (3.5 in)
- 2,500 blows per minute
- Contains: quick-change retainer

122MAX – Round shank
122MAXH – Hexagonal shank

- Stroke: 67 mm (3.5 in)
- 3,500 blows per minute
- Contains: quick-change retainer

118MAXK or **122MAXK** – Round shank
118MAXHK or **122MAXHK** – Hexagonal shank

- Contains: hammer, quick change retainer and 5 chisels.

121/Q-EU – Round shank
121/QH-EU – Hexagonal shank

- Stroke: 58 mm (2.3 in)
- 3,000 blows per minute

116-EU – Round shank
116H-EU – Hexagonal shank

- Stroke: 67 mm (2.6 in)
- 3,500 blows per minute
- Power regulator

LA426-EU – Round shank
LA427-EU – Hexagonal shank

- Stroke: 67 mm (2.6 in)
- 3,500 blows per minute
- Power regulator
- Contains: 116-EU or 116H-EU and 6 chisels

125-EU

- Stroke: 28 mm (1.1 in)
- 4,600 blows per minute
- Contains: steel needles

Accessories: sets of 19 needles

	CCN	Material	Lenth
NS11-122-19	03676368	Steel	178 mm
NS11-22-19	03676335	Steel	127 mm
NS11-S22-19	03676343	Stainless steel	127 mm
NS11-B22-19	03676350	Berylium copper	127 mm

9500

Hammer Accessories

- **115-183** (CCN: 03788510) spring retainer for 116-EU, 116H-EU, LA426-EU and LA427-EU
- **AVC10-183** (CCN: 03010980) spring retainer for 121/Q-EU and 121/QH-EU
- **9512** (CCN: 45563749) quick-change retainer for all models
- **9500** (CCN: 80117427) chisels, round shank (5 pieces)
- **116H-K5** (CCN: 92536093) chisels, hexagonal shank (5 pieces)

115-183

9512

Specifications at 6.2 bar (90 psi)

	CCN	Blows per minute	Shank diamter	rpm	kg	Lenght mm	NPTF	Min. hose diameter mm	L/s	L/s max	dB(A)	m/s²/K(1)
Air Hammers – Round shank												
121/Q-EU	01343698	3,000	10.2	58	1.59	194	1/4"	10	1.4	7.1	95.3	19.9/4.6
122MAX	47124482	3,500	10.2	67	1.80	218	1/4"	10	1.4	5.5	94.2	5.5/1.8
118MAX	47124490	2,500	10.2	89	2.10	314	1/4"	10	1.4	5.5	92.6	4.0/1.4
116-EU	01343755	3,500	10.2	67	1.54	198	1/4"	10	1.4	7.1	101.4	14.8/2.2
Air Hammers – Hexagonal shank												
121/QH-EU	01344944	3,000	10.2	58	1.59	194	1/4"	10	1.4	7.1	95.3	19.9/4.6
122MAXH	46816740	3,500	10.2	67	1.80	218	1/4"	10	1.4	5.5	94.2	5.5/1.8
118MAXH	46816732	2,500	10.2	89	2.10	314	1/4"	10	1.4	5.5	92.6	4.0/1.4
116H-EU	01343904	3,500	10.2	67	1.54	198	1/4"	10	1.4	7.1	101.4	14.8/2.2
Air Needle Scaler												
125-EU	01352178	4,600	–	28.6	2.83	465	1/4"	8	3.8	7.1	96.6	8.3/1.3

(1) ISO28927 – 3-axis measurement: vibration level/measurement uncertainty.

Air
Filters, Regulators & Lubricators

Filter + Regulator + Lubricator

- Operating temperature: -5 to +79 °C
- Maximum inlet pressure: 17.2 bar (250 psig)
- Pressure gauge: 0 to 9.7 bar (0-140 psig)
- 5 micron filter element

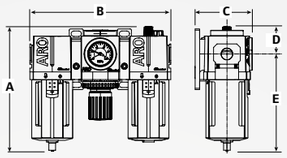

C381B1-821

C383D1-811

5µ filter element

	CCN	BSP	L/s(1)	Bowl material/ drain type	5µ filter element CCN
C381B1-821	15302961	1/4"	21.7	Metal/Automatic	15299183
C382C1-811	15315633	3/8"	40.0	Metal/Automatic	15299662
C383D1-811	15304108	1/2"	70.8	Metal/Automatic	15299407
C383E1-811	15304181	3/4"	80.7	Metal/Automatic	15299407
C384F1-811	15317639	1"	101.5	Metal/Automatic	15299878

Dimensions	A mm	B mm	C mm	D mm	E mm
C381B1-821	149	120	80	42	107
C382C1-811	199	168	84	45	154
C383D1-811	216	221	90	43	173
C383E1-811	216	221	90	43	173
C384F1-811	292	282	109	55	237

Filter/Regulator + Lubricator

- Operating temperature: -5 to +52°C
- Maximum inlet pressure: 10.3 bar (150 psig)
- Pressure gauge: 0 to 9.7 bar (0 – 140 psig)
- 5 micron filter element

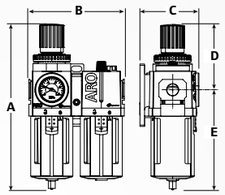

C381B1-600

C383D1-600

	CCN	BSP	L/s(1)	Bowl material/ drain type	5µ filter element CCN
C381B1-600	15302896	1/4"	20.7	Polycarbonate/Manual	15299183
C382C1-600	15315567	3/8"	33.5	Polycarbonate/Manual	15299662
C383D1-600	15304033	1/2"	56.7	Polycarbonate/Manual	15299407
C383E1-600	15304116	3/4"	67.0	Polycarbonate/Manual	15299407
C384F1-610	15317605	1"	98.2	Metal/Manual	15299878

Dimensions	A mm	B mm	C mm	D mm	E mm
C381B1-600	157	80	80	67	90
C382C1-600	209	112	84	86	123
C383D1-600	252	145	90	100	152
C383E1-600	252	145	90	100	152
C384F1-610	351	186	109	133	218

Filter/Regulator

- Operating temperature. With polycarbonate bowl: -5 to +52°C. With metal bowl: -5 to +79°C
- Maximum operating pressure. With polycarbonate bowl: 10.3 bar (150 psig). With metal bowl: 17.2 bar (250 psig)
- Pressure gauge: 0 to 9.7 bar (0 – 140 psig)
- 5 micron filter element

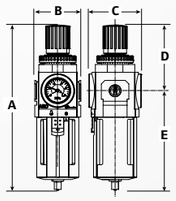

P391B4-600

P393D4-614

Fixing bracket

	CCN	BSP	L/s(1)	Bowl material/ drain type	Fixing bracket CCN	5µ filter element CCN
P391B4-600	15302813	1/4"	22.1	Polycarbonate/Manual	15307416	15299183
P391B4-624	15302847	1/4"	22.1	Metal/Automatic	15307416	15299183
P392C4-600	15315260	3/8"	42.5	Polycarbonate/Manual	15307424	15299662
P392C4-614	15315294	3/8"	42.5	Metal/Automatic	15307424	15299662
P393D4-600	15305337	1/2"	79.5	Polycarbonate/Manual	15307432	15299407
P393D4-614	15305360	1/2"	79.5	Metal/Automatic	15307432	15299407
P393E4-600	15305931	3/4"	81.6	Polycarbonate/Manual	15307432	15299407
P393E4-614	15305964	3/4"	81.6	Metal/Automatic	15307432	15299407

Dimensions	A mm	B mm	C mm	D mm	E mm
P391B4-600	157	40	74	67	90
P391B4-624	175	40	74	67	108
P392C4-600	207	56	79	86	121
P392C4-614	229	56	79	86	143
P393D4-600	253	70	80	100	153
P393D4-614	276	70	80	100	176
P393E4-600	253	70	80	100	153
P393E4-614	276	70	80	100	176

(1) At 6.2 bar (90 psig)

Quick Release Couplings & Nipples

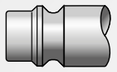

EURO 7.2 · 7.4

		Nipples BSP		Standard couplings		Safety couplings		Safety couplings	
		Part no.	CCN	Part no.	CCN	Part no.	CCN	Part no.	CCN
Ø 7.2 – 7.4 mm				Max: 16 bar – 25 L/s(1)		Max: 16 bar – 25 L/s(1)		Max: 12 bar – 30 L/s(1)	
Male thread	1/4" BSP	77NMC2	88104070	7N7CCMC2	25010505	7S7CCMC2	25010398	7S7CMC2	88104187
	3/8" BSP	77NMC3	88104088	7N7CCMC3	25010513	7S7CCMC3	25010406	7S7CMC3	88104195
	1/2" BSP	77NMC4	88104096	7N7CCMC4	25010521	7S7CCMC4	25010414	7S7CMC4	88104203
Female thread	1/4" BSP	77NFC2	88104047	7N7CCFC2	25010471	7S7CCFC2	25010364	7S7CFC2	88104153
	3/8" BSP	77NFC3	88104054	7N7CCFC3	25010489	7S7CCFC3	25010372	7S7CFC3	88104161
	1/2" BSP	77NFC4	88104062	7N7CCFC4	25010497	7S7CCFC4	25010380	7S7CFC4	88104179
For hose	Ø 6 mm	77NH06	88104104	7N7CCH06	25010539	7S7CCH06	25010422	7S7CH06	88104211
	Ø 8 mm	77NH08	88104112	7N7CCH08	25010547	7S7CCH08	25010430	7S7CH08	88104229
	Ø 10 mm	77NH10	88104138	7N7CCH10	25010562	7S7CCH10	25010455	7S7CH10	88104245
	Ø 13 mm	77NH13	88104146	7N7CCH13	25010570	7S7CCH13	25010463	7S7CH13	88104252

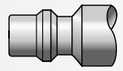

ISO 6150B MIL-C4109

		Nipples BSP		Standard couplings		Safety couplings		Safety couplings	
		Part no.	CCN	Part no.	CCN	Part no.	CCN	Part no.	CCN
Ø 6 mm (1/4")				Max: 12 bar – 13 L/s(1)		Max: 16 bar – 15 L/s(1)		Max: 12 bar – 13 L/s(1)	
Male thread	1/4" BSP	IB6NMC2	88103015	IBN6CMC2	88103197	IBS6CCMC2	25010075	IBS6CMC2	88103098
	3/8" BSP	IB6NMC3	88103023	IBN6CMC3	88103205	IBS6CCMC3	25010083	IBS6CMC3	88103106
	1/2" BSP	–	–	IBN6CMC4	88103213	IBS6CCMC4	25010091	IBS6CMC4	88103114
Female thread	1/4" BSP	IB6NFC2	88102991	IBN6CFC2	88103163	IBS6CCFC2	25010042	IBS6CFC2	88103064
	3/8" BSP	IB6NFC3	88103007	IBN6CFC3	88103171	IBS6CCFC3	25010059	IBS6CFC3	88103072
	1/2" BSP	–	–	IBN6CFC4	88103189	IBS6CCFC4	25010067	IBS6CFC4	88103080
For hose	Ø 6 mm	IB6NH06	88103031	IBN6CH06	88103221	–	–	IBS6CH06	88103122
	Ø 8 mm	IB6NH08	88103049	IBN6CH08	88103239	IBS6CCH08	25010117	IBS6CH08	88103130
	Ø 10 mm	IB6NH10	88103056	IBN6CH10	88103247	IBS6CCH10	25010125	IBS6CH10	88103148
Ø 8 mm (3/8")				Max: 12 bar – 33 L/s(1)		Max: 16 bar – 30 L/s(1)		Max: 12 bar – 33 L/s(1)	
Male thread	1/4" BSP	IB8NMC2	88103296	IBN8CMC2	88104567	–	–	IBS8CMC2	88103395
	3/8" BSP	IB8NMC3	88103304	IBN8CMC3	88104575	IBS8CCMC3	25010158	IBS8CMC3	88103403
	1/2" BSP	IB8NMC4	88103312	IBN8CMC4	88104583	IBS8CCMC4	25010166	IBS8CMC4	88103411
Female thread	1/4" BSP	IB8NFC2	88103262	IBN8CFC2	88104534	–	–	IBS8CFC2	88103361
	3/8" BSP	IB8NFC3	88103270	IBN8CFC3	88104542	IBS8CCFC3	25010133	IBS8CFC3	88103379
	1/2" BSP	IB8NFC4	88103288	IBN8CFC4	88104559	IBS8CCFC4	25010141	IBS8CFC4	88103387
For hose	Ø 8 mm	IB8NH08	88103320	–	–	IBS8CCH08	25010174	IBS8CH08	88103429
	Ø 10 mm	IB8NH10	88103338	IBN8CH10	88104609	IBS8CCH10	25010182	IBS8CH10	88103437
	Ø 13 mm	IB8NH13	88103346	IBN8CH13	88104617	IBS8CCH13	25010190	IBS8CH13	88103445
Ø 11 mm (1/2")						Max: 16 bar – 70 L/s(1)			
Male thread	3/8" BSP	IB11NMC3	25014028	–	–	IBS11CCMC3	25013939	–	–
	1/2" BSP	IB11NMC4	25014036	–	–	IBS11CCMC4	25013947	–	–
	3/4" BSP	–	–	–	–	IBS11CCMC6	25013954	–	–
Female thread	3/8" BSP	IB11NFC3	25014002	–	–	IBS11CCFC3	25013905	–	–
	1/2" BSP	IB11NFC4	25014010	–	–	IBS11CCFC4	25013913	–	–
	3/4" BSP	–	–	–	–	IBS11CCFC6	25013921	–	–
For hose	10 mm	IB11NH10	25014044	–	–	IBS11CCH10	25013962	–	–
	13 mm	IB11NH13	25014051	–	–	IBS11CCH13	25013970	–	–
	16 mm	IB11NH16	25014069	–	–	IBS11CCH16	25013988	–	–
	19 mm	IB11NH19	25014077	–	–	IBS11CCH19	25013996	–	–

(1) Measured at 6 bar (87 psig) at inlet, with 10% pressure drop as per industry standard.

Air
Hoses

Polyurethane Recoil Hoses

- Operating temperature: -40 to +38 °C
- Operating pressure: 8 bar (115 psi) at 24 °C

	CCN	Min. hose diameter	NPT	max m	helix max m	helix min m
Yellow Hose						
34102	92833375	6	1/4"	3	2.5	0.15
34202	92833383	6	1/4"	6	5	0.31
34302	92833391	6	1/4"	9	8	0.43
35102	92833409	8	1/4"	3	2.5	0.14
35202	92832526	8	1/4"	6	5	0.30
35302	92833417	8	1/4"	9	8	0.46
IR36103	92835172	9.5	1/4"	3	2.5	0.15
IR36203	92835180	9.5	1/4"	6	5	0.34
IR36303	92835198	9.5	1/4"	9	8	0.52
IR36102	92835149	9.5	3/8"	3	2.5	0.15
IR36202	92835156	9.5	3/8"	6	5	0.34
IR36302	92835164	9.5	3/8"	9	8	0.52
IR37102	92835206	13	1/2"	3	2.5	0.16
IR37202	92835214	13	1/2"	6	5	0.38
Blue Hose						
IR36713	88098991	9.5	3/8"	6	5	0.34
IR36715	88099015	9.5	3/8"	9	7.5	0.52

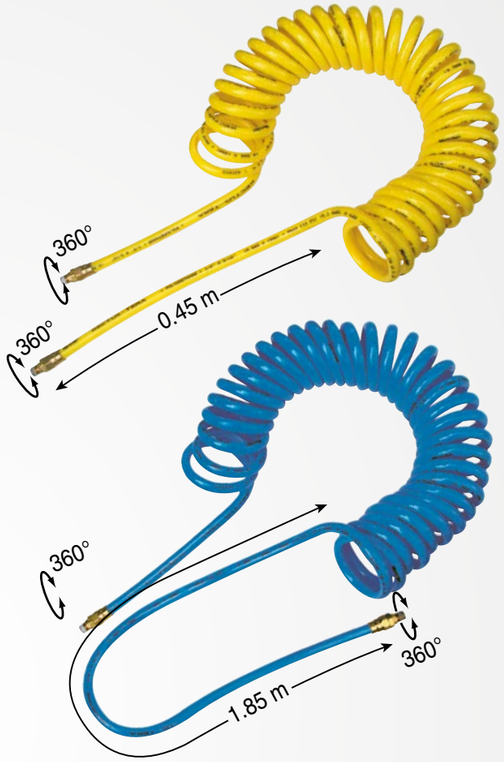

Hose Whips

	CCN	NPT	mm
33104	91486340	1/4"	300
33204	91486357	3/8"	300
33304	91488205	1/2"	300

PVC Round Hose, 30 m Coil

- Safety factor 4:1

	CCN	inside mm	outside mm	Max. operating pressure at 20°C
RH-6	92545730	6	11	18 bar
RH-8	92536036	8	13	15 bar
RH-10	92536044	10	14	13 bar
RH-12	92536051	13	17	11 bar
RH-16	92536069	16	21	11 bar
RH-19	92536077	19	24	11 bar

Hose Clamps

	CCN	mm	Quantity
CO-0911	56753080	Ø 9 – 11	100
CO-1113	56753098	Ø 11 – 13	100
CO-1315	56753106	Ø 13 – 15	100
CO-1518	56753122	Ø 15 – 18	100
CO-1821	56753148	Ø 18 – 21	100
CO-2225	56753163	Ø 22 – 25	100

Lubricants

Lubricant Kits

Contains: grease 80 g, oil 0.12 L and grease pump
67-LBK1 (CCN: 04637344) for angle head tools
105-LBK1 (CCN: 04616090) for Impactools with metal housing
115-LBK1 (CCN: 04616108) for Impactools with composite housing

	CCN	No.	Description/Recommended use	Capacity
Grease				
67-4T	04637336	67	For angle head tools	0.12 L (tube)
67-1LB	03773009			0.45 kg
105-4T-6	04618930	105	For Impactools with metal housing	6 tubes of 0.12 L
105-1LB	04279147			0.45 kg
105-8LB	04264875			3.60 kg
115-4T	04616157	115	For Impactools with composite housing	0.12 L (tube)
115-1LB	04192480			0.45 kg
Oil				
10Z4	03875671	10	For Impactools, drills, screwdrivers and percusive tools	0.12 L (tube)
10P	03875689			0.50 L
10G	03875697			3.80 L
50P	03875705	50	For grinders and Impactools	0.50 L
50G	03875713			3.80 L

Ingersoll Rand (NYSE:IR) advances the quality of life by creating comfortable, sustainable and efficient environments. Our people and our family of brands—including Club Car®, Ingersoll Rand®, Thermo King® and Trane®—work together to enhance the quality and comfort of air in homes and buildings; transport and protect food and perishables; and increase industrial productivity and efficiency. We are a $12 billion global business committed to a world of sustainable progress and enduring results.

www.ingersollrandproducts.com

Distributed by:

Ingersoll Rand, IR, the IR logo, IQv20 Series, IQv12 Series, Impactool and Inline are trademarks of Ingersoll Rand, its subsidiaries and/or affiliates. All other trademarks are the property of their respective owners.

Nothing contained on these pages is intended to extend any warranty or representation, expressed or implied, regarding the product described herein. Any such warranties or other terms and conditions of sale of products shall be in accordance with Ingersoll Rand's standard terms and conditions of sale for such products, which are available upon request.

Product improvement is a continuing goal at Ingersoll Rand. Designs and specifications are subject to change without notice or obligation.

We are committed to using environmentally conscious print practices.

©2015 Ingersoll Rand

IRITS-0409-041-EUEN-0715